Mosaic Core Specification

Core Number: C219SPX	Starter Kit Number: S219SPX	Rev. 3	11/05/2021
Product Specifications:	**Description**		
Microbolometer	Uncooled Vanadium Oxide		
Pixel Pitch	12 Microns		
Spectral Response	7.8 - 14 Microns		
Sensor Resolution (Array Format)	200 (h) x 150 (v); 30,000 pixels		
Frame Rate	Fast Frame - up to <32Hz		
Non-Uniformity Correction (NUC)	Automatic NUC (with shutter)		
Video Output Interfaces	USB		
Power:			
Power Requirment	3.3-5.0V, <50mW (Core only), 300mW (Core + Coprocessor Board)		
Optical & Mechanical:			
Focal Length	9.1mm EFL		
F-number (Focal Length/aperture)	f/1.00		
Spatial Resolution (IFOV, center)	1.32		
Field of View (FOV)	15° Horizontal x 12° Vertical		
Detection Range	758m (based on Johnson Criteria)		
Recognition Range	190m (based on Johnson Criteria)		
Identification Range	108m (based on Johnson Criteria)		
Distance to Spot Ratio	126:1		
Core Size/ Core Weight	20mm x 20mmx 21mm	Core Weight: 12 g	
Seek Software Development Kit:			
Supported Platforms	USB: Seek Linux, Windows, & Android SDK		
Output Formates (User selectable)	**Linux / Windows SDK**	**Android SDK**	
	16-bit filtered pre AGC	16-bit filtered pre AGC	
	32-bit ARGB post colorization.	32-bit ARGB post colorization in the bitmap image.	
	32-bit floating point or 16-bit fixed point	32-bit floating point or 16-bit fixed point thermography	
Imaging Specifications:	**Calibrated Output in °C, °F, K**		
Imaging Range	-40°C to +330°C at ambient operating temprature		
Thermography Accuracy	Center spot temperature greater of ±5°C or 5% between -10°C to 140°C		
	Center spot temperature greater of ±10°C or 10% (typical) above 140°C		
	All measured at 25°C ambient operating temperature and nominal measurement distance of 12 inches.		
	Temperature reported is Center Spot temperature, which is an average of the center 36 pixels.		
Sensor Sensitivity	65 mK (typical), <100 mK (max) @ 25°C		
Emmissivity	Factory default emissivity is set to 0.97. Emissivity is adjustable using the SDK.		
Environmental Conditions:			
Operating Temperature Range	-10°C to +60°C (-14°F to 140°F)		
Storage Temperature Range	-40°C to +80°C (-40°F to 176°F)		
Solar Protection	Yes		
Humidity	10%~95%RH, non-condensing		
Regulatory	ROHS, WEEE, REACH		
Accessories:			
Cushion	Yes		
Bracket	Yes		
Sensor Flex	Yes		
Coprocessor Board	Yes		
USB Flex	Yes		
Customer Responsibilities:			
IP Rating	IP67		
Shock/Vibe	Customer responsibility with proper integration into final product housing		

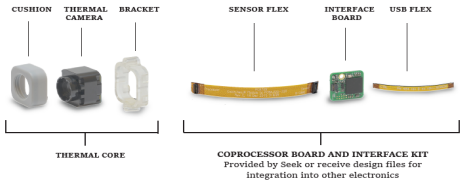

Copyright 2021 Seek Thermal Inc.

Specifications are subject to change without notice.

THIS DRAWING COVERS
THE FOLLOWING SKUS:
C2*9*
C3*9*
S2*9*
S3*9*

NO COPROCESSOR BOARD

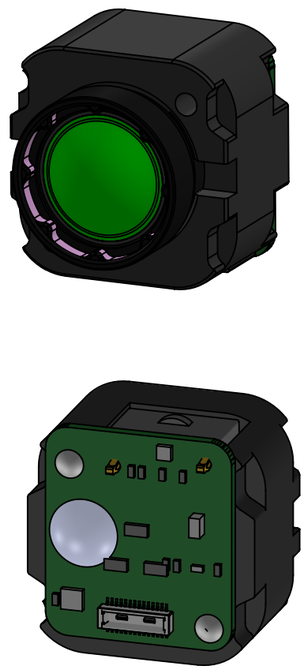

"P" OPTION WITH COPROCESSOR BOARD

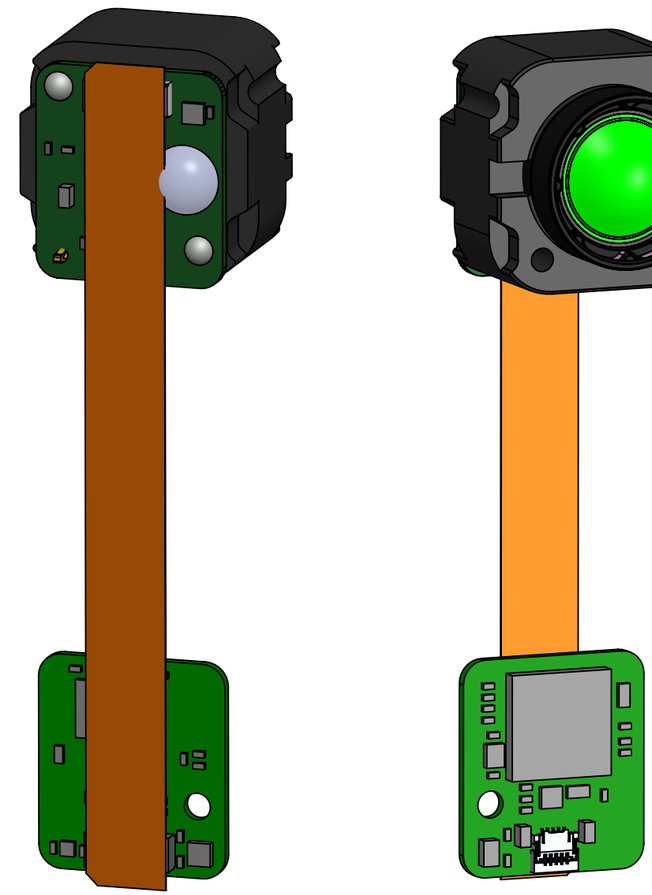

NOTES:

1. SEE 3D CAD FILE FOR FULL GEOMETRY.

2. KEEPOUT FOR SHUTTER CLEARANCE.

3. LENS ADHESIVE DOES NOT EXTEND ABOVE FRONT FACE.

2. THIS DESIGN IS CAPABLE OF BEING IP67 WHEN USED WITH APPROPRIATE SEALING DESIGN. SEE MOSAIC DATASHEET.

5. ADHESIVE BUMP PRESENT ON <9Hz CORES.

3. COPROCESSOR BOARD AND FLEX INCLUDED WITH "P" OPTION CORES.

MATERIAL	SEE NOTES	DRAWN	DLM 27MAR2019
FINISH	SEE NOTES	APPR.	
UNLESS OTHERWISE SPECIFIED:		THIRD ANGLE PROJECTION	
DIMENSIONS ARE IN MM [IN] IN ACCORDANCE WITH ASME Y14.5-2009			
GENERAL TOLERANCES 0.5 TO 6 ±0.1 [.004] > 6 TO 30 ±0.2 [.008] > 30 TO 120 ±0.2 [.008] >120 TO 400 ±0.3 [.012] ANGLES ±1°		THE INFORMATION CONTAINED IN THIS DRAWING IS THE SOLE PROPERTY OF SEEK THERMAL. ANY REPRODUCTION IN PART OR AS A WHOLE WITHOUT WRITTEN PERMISSION IS PROHIBITED.	

Seek thermal™

TITLE: DOC, INTERFACE CONTROL DRAWING, MECH, 9.1MM MOSAIC

SIZE	DWG. NO.	REV
B	DOC_247	3

SCALE: 2:1 SHEET 1 OF 2

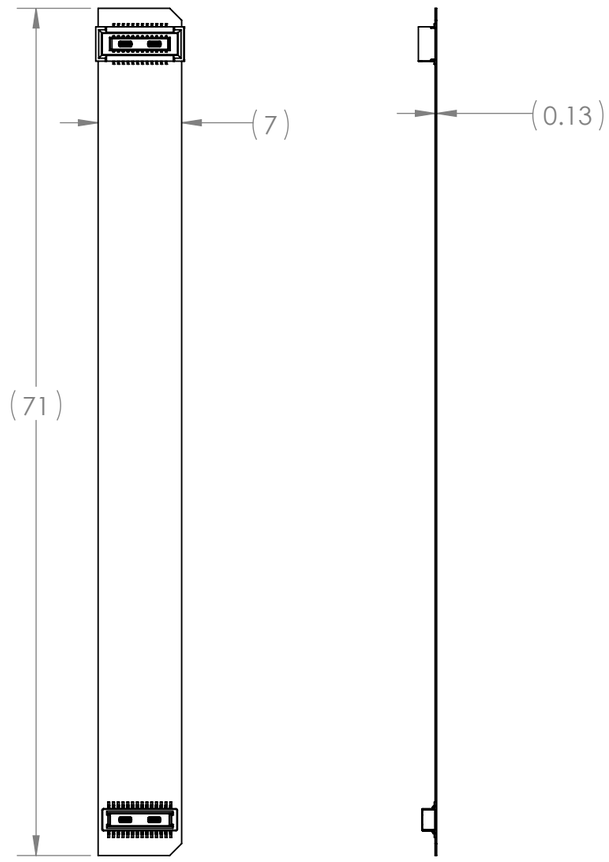

FLEX CABLE

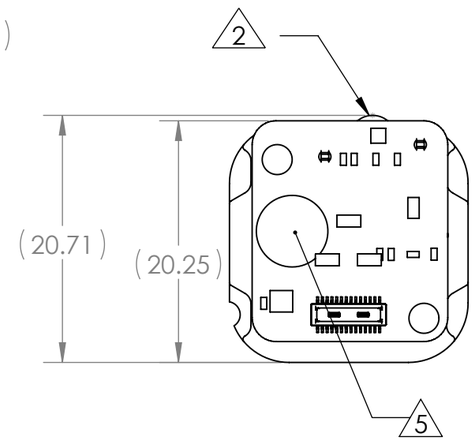

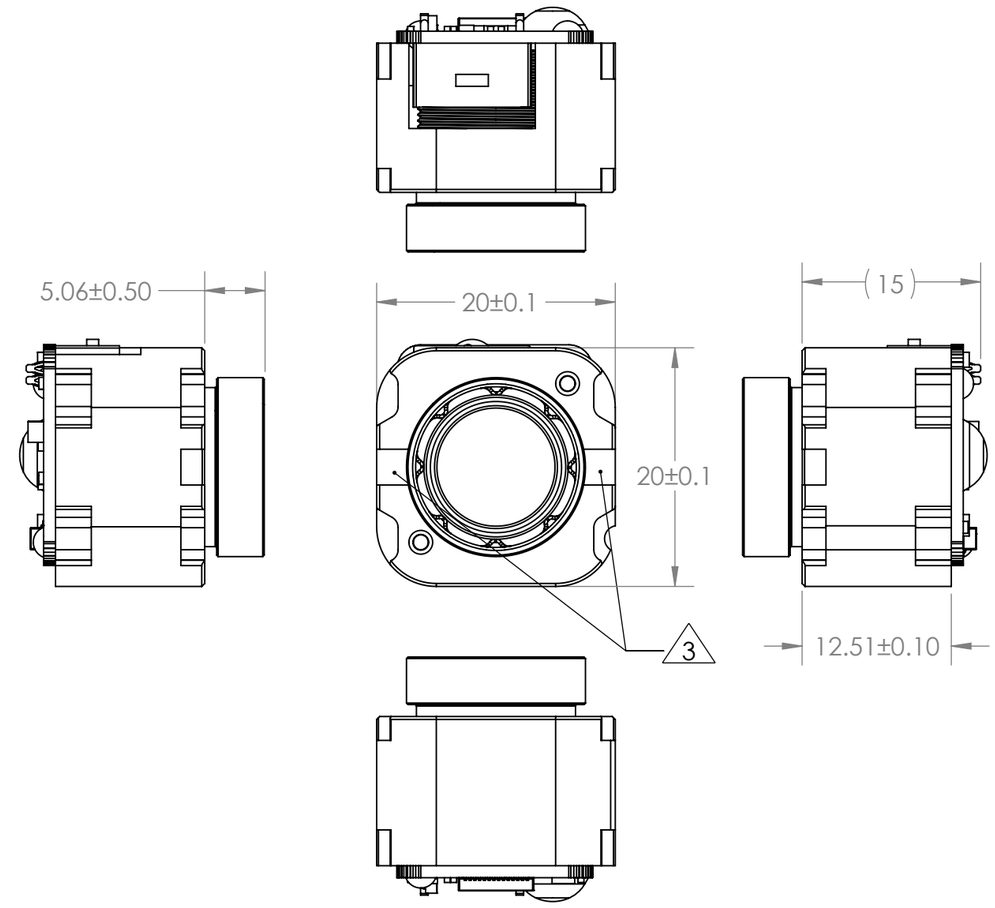

THERMAL IMAGING CORE

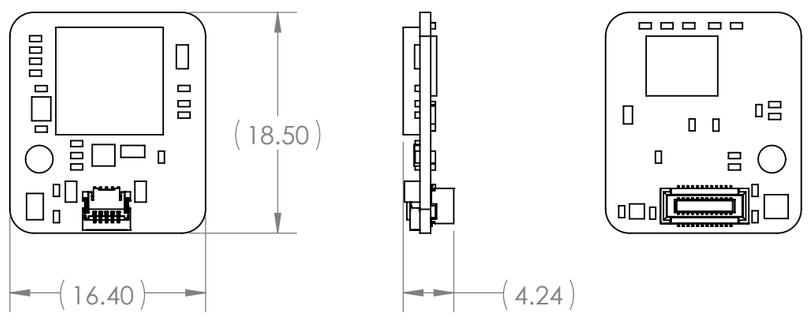

COPROCESSOR BOARD

THE INFORMATION CONTAINED IN THIS DRAWING IS THE SOLE PROPERTY OF SEEK THERMAL. ANY REPRODUCTION IN PART OR AS A WHOLE WITHOUT WRITTEN PERMISSION IS PROHIBITED.

Seek thermal

TITLE: DOC, INTERFACE CONTROL DRAWING, MECH, 9.1MM MOSAIC

SIZE	DWG. NO.	REV
B	DOC_247	3

SCALE: 2:1 | SHEET 2 OF 2